PARTS SECTION: 42 HD 092-4000-23

Parts List				Parts List			
ITEM	QTY	PART NUMBER	DESCRIPTION	ITEM	QTY	PART NUMBER	DESCRIPTION
4	2	015-0159-00	8-QUICK-RELEASE CLAMP	54	1	042-0011-00	1/4 X 1.375 SQ MACHINERY KEY 1018 STL PLN
10	1	088-1897-00	Bagger Reciver tube weldment	55	1	088-1960-00	ZT/ Maverick Blower Top Discharge Assembly
11	10	100027	1/2-13 Nylon Flange Nut	56	1	039-0106-00	MZ-ZT Bagger mount Brkt left
13	1	093-1130-00	Humbolt Front Weight Receiver Hitch Weldment	57	1	039-0107-00	MZ-ZT Bagger mount Brkt Right
14	1	044-5006-00	Receiver Hitch Pin	59	1	093-1140-00	2021 ZT-Maverick Front Hitch
15	7	088-1999-00	2019 Outlaw Counter Weight	60	1	088-1899-00	Bagger Carrier Tube Weldment Residential
16	2	018-7050-00	1/2" x 4 1/2" Bolt	62	2	018-2080-00	1/2-13 X 1-1/4 HEX CAP SCREW (GR.5) ZINC
17	1	018-6036-00	1/2" x 2 3/4" Hex Bolt	65	1	026-0126-00	Deck weight strap
18	1	018-7016-00	1/2-13 x GR 5 Hex Bolt Zinc	66	3	026-0125-00	Side Deck weight
26	2	088-4065-00	30 gal Bag	67	2	013-5202-00	3/8" Nylock Flange Nut
28	4	018-8063-00	5/16" x 3/4" Hex Bolt	68	1	088-1959-00	2023 2 bag carrier Assembly
29	4	013-8049-00	5/16-18 Nylon Flange Nut	69	1	026-0127-00	Deck weight mount plate
44	1	041-0057-00	69" blower belt	70	1	093-1136-98	2021 Maverick Rear Hitch Assembly
46	1	088-1954-00	Exhaust adaptor 8"	71	1	026-0363-00	ZT Blower belt cover
47	1	033-4400-00	2022 Blower Deck pulley	72	1	026-0357-00	Blower drive pulley cover Front
48	1	037-0007-23	Blower deck spindle	73	1	026-0358-00	Blower drive pulley cover Rear
49	1	088-4090-00	8" Kanaflex Tubing	74	4	018-2012-00	1/4-20 X 1/2 BUTTON SOCKET CAP SCREW 18-8 STAINLESS STEEL
51	2	013-5201-00	3/8-16 HEX SERRATED FLANGE NUT HARD/ZINC				
52	4	018-6049-00	*Varies*	75	4	013-9001-00	1/4-20 HEX SERRATED FLANGE NUT HARD/ZINC
53	2	018-0015-00	1/2-13 X 2-1/2 HEX CAP SCREW GR 5 ZINC	76	2	091-3012-00	Danger Decal-Spindle/Discharge
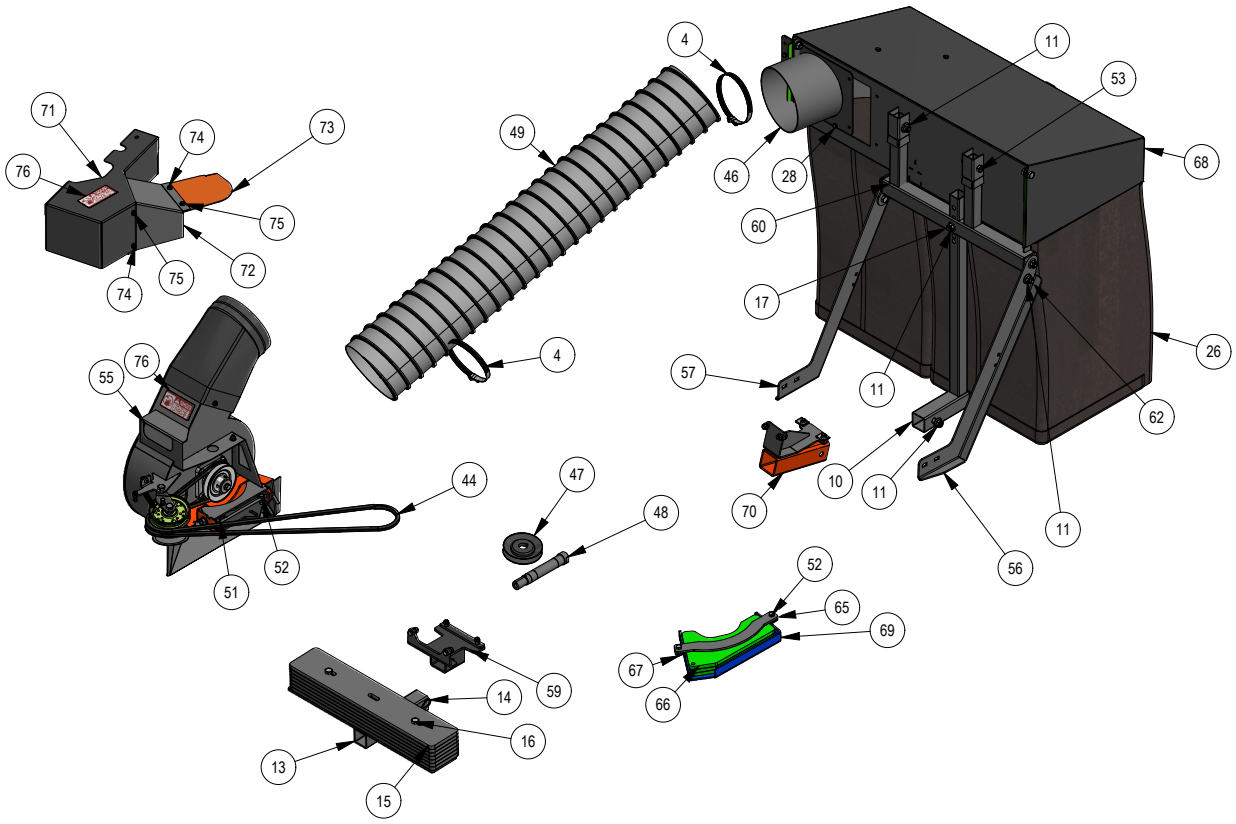
Hardware Pack #088-0036-00