27

BAD BOY COUNTRY

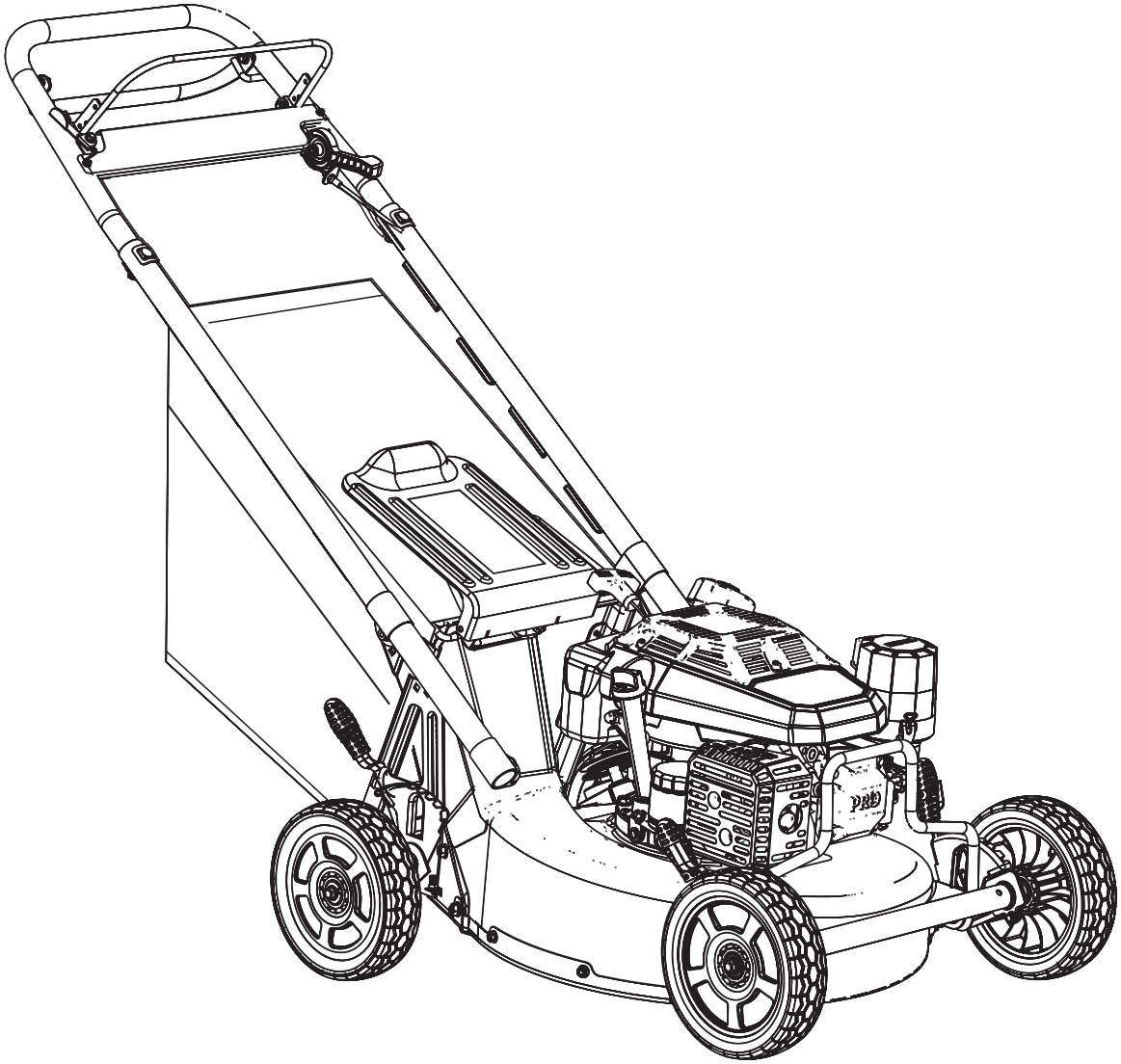

21″ PUSH MOWER

ZERO-TURN MOWER

OWNER'S OPERATOR SERVICE MANUAL

For additional information, please see us at

www.badboycountry.com

©2026 10-26

INTRODUCTION

Careless or improper use of this Lawn Mower can cause serious or even fatal injury. Carefully read, understand and follow ALL instructions in this manual as well as the instructions in the included **Owner's Manual for the engine** before using the Bad Boy **21" Self-Propelled Push Mower**.

Allow only competent adults to operate this lawn mower. It is the owner's responsibility to ensure that all operators of this mower have read and understand the content of this manual.

Common sense:

The focus of this manual is HOW to operate and service the equipment safely. It is not possible to cover every conceivable situation you can face when using this mower. Therefore use this product only in a manner described in this manual. **Operation or handling the machine in any other manner can lead to serious injury or death.** If a situation is not described in this manual it should be considered dangerous - and not be done.

If you are unfamiliar with this product make sure that you carefully understand how it functions and practice all operations and handling before putting the machine to use. Familiarize yourself in the presence of an experienced operator. Avoid all situations that are beyond your capability.

If you still feel uncertain about the operating procedures after reading these instructions DO NOT operate the machine until you have consulted an experienced operator.

Bad Boy Mowers is committed to keeping you up and running. For technical support, warranty questions, or parts, reach out using the contact information below.

Bad Boy, Inc.
102 Industrial Drive
Batesville, AR 72501

Technical Support: technicalsupport@badboycountry.com
Warranty: warranty@badboycountry.com
Parts: partsdept@badboycountry.com

PERSONAL SAFETY EQUIPMENT

When working and operating garden equipment - approved personal safety items should be used:

Hearing Protection

Eye Protection

Protective Gloves

Protective Shoes

SAFETY DEFINITIONS

In this manual a Safety Alert Symbol ⚠ followed by the signal words WARNING and CAUTION are used to identify safety information about hazards which can result in death, serious injury and/or property damage.

These signal words mean:

⚠ **WARNING** indicates a hazard which, if not avoided, **could result in death or serious injury.**

⚠ **CAUTION** indicates a hazard which, if not avoided, **might result in minor or moderate injury.**

NOTICE indicates a message not related to personal injury.

SAFETY HAZARDS

⚠ WARNING

DO NOT MODIFY THE PRODUCT

Under no circumstances may the design of the machine be modified without the permission of the manufacturer. Always use genuine parts and accessories. Unauthorized modifications, parts and/or accessories can result in serious personal injury or the death of the operator or others. Your warranty may not cover damage or liability caused by the use of unauthorized accessories or replacement parts.

⚠ WARNING

ASPHYXIATION HAZARD

Running an engine in a confined or badly ventilated area can result in injury or death due to asphyxiation or carbon monoxide poisoning.

⚠ CAUTION

HEARING HAZARD

During the normal use of this machine, operator may be exposed to a noise level equal to or higher than 85 dB(A). Use hearing protection.

REGISTER THE PRODUCT

The warranty registration must be completed within 30 days of purchase to validate your warranty. As a new equipment owner, it is your responsibility to ensure warranty registration is completed.

Warranty registration should be completed by your selling dealer at the time of delivery. Please confirm registration has been completed with your dealer.

Record the following information for your records:

PURCHASE DATE: _____

MODEL No: ***BBY21CV200*** SERIAL No: _____

ENGINE MODEL: ***CV200*** SPEC No ***PH-CV200-3020*** ENGINE SERIAL No: _____

The lawn mower model and serial number as well as the engine model number, engine type and serial number are critical in order to obtain the correct service parts. Bad Boy Mowers has service parts available as listed in the spare parts list. All engine parts are distributed through the Rehlko engine dealer networks. Please refer to the engine Owner's Manual that was included with the mower.

Mail information: Street Address: _____

Name: _____ City, State, Zip code _____

CONTENTS

Content Page

Introduction, personal safety 2
General safety message..... 2-3

Registration of the product …… 3

Table of contents ……... 4
Lawn mower safety..... 4-5

Decals and locations..... 6
What is what on the product..... 6

Assembly - setup 7-9

Recommended engine oil .....…… 8
Recommended fuels..... 10
Fuel and fuel safety warnings……... 10
Controls and operation …….. 10-11

Maintenance 12-13
Maintenance schedule..... 12
Blade maintenance 13
Oil change..... 13

Warranty 15

WARNING

In order to prevent accidental starting when setting up, transporting, adjusting or making repairs, always disconnect spark plug wire and place wire where it can not come in contact with the plug.

WARNING

Always secure the mower when unattended. Never leave the mower in such way that an unauthorized person can operate or move the mower.

LAWN MOWER SAFETY

SAFETY PRACTICES FOR WALK-BEHIND MOWERS

This lawn mower is capable of amputating hands and feet and throwing objects. Failure to observe the following safety instructions could result in serious injury or death.

I. GENERAL OPERATION

1. Read, understand, and follow all instructions on the machine and in the manuals before starting.

2. Do not put hands or feet near or under the machine. Keep clear of the discharge opening at all times.

3. Only allow responsible adults, who are familiar with these instructions, to operate this machine.

4. Clear the area of objects such as rocks, wire, toys, etc., which could be thrown by the blade. Stay behind the handle when the engine is running.

5. Be sure the area is clear of other people before operating. Stop machine if anyone enters the area.

6. Do not operate machine barefooted or while wearing sandals. Always wear substantial footwear (protective shoes).

7. Do not pull machine backward unless absolutely necessary. Always look down and behind before and while moving backward.

8. Keep the operating area clear of bystanders. Stop the blade when crossing gravel surfaces.

9. Do not operate machine without the entire grass catcher, or mulch plug and discharge door, rear guards, or other safety protective devices in place and working.

10. Never leave a running machine unattended.

11. Stop the engine and wait until the blade comes to a complete stop before cleaning the machine, removing grass catcher, or unclogging the discharge chute.

12. Operate machine only in daylight or good artifi cial light.

13. Do not operate machine while under the infl uence of alcohol or drugs.

14. Never operate mower in wet grass. Always be sure of your footing - walk - never run.

15. Disengage the drive system, before starting the engine.

16. If the machine should start to vibrate abnormally, stop the engine and check for the cause immediately. Vibration is generally a warning of trouble.

17. Always wear approved personal safety equipment such as hearing protection, eye protection, and protective gloves when operating machine.

18. See manufacturer's instructions for proper operation and installation of accessories and parts. Only use accessories or parts approved by Bad Boy or the engine manufacturer.

LAWN MOWER SAFETY

II SLOPE OPERATION
Slopes are a major factor related to slip and fall accidents, which can result in severe injury. Operation on all slopes requires extra caution. If you feel uneasy on a slope, do not mow it.

1. Mow across the face of slopes; never up and down. Exercise extreme caution when changing direction on slopes.

2. Watch for holes, ruts, bumps, rocks, or other hidden objects. Uneven terrain could cause a slip and fall accident. Tall grass can hide obstacles.

3. Do not mow on wet grass or excessively steep slopes. Poor footing could cause a slip and fall accident.

4. Do not mow near drop-offs, ditches, or embankments. You could lose your footing or balance.

III. CHILDREN
Tragic accidents can occur if the operator is not alert to the presence of children. Children are often attracted to the machine and the mowing activity. Never assume that children will remain where you last saw them.

1. Keep children out of the mowing area and under the watchful care of a responsible adult other than the operator.

2. Be alert and turn mower off if a child enters the area.

3. Never allow children to operate the machine.

4. Use extra care when approaching blind corners, shrubs, trees, or other objects that may block your view of a child.

IV. SAFE HANDLING OF GASOLINE:
To avoid personal injury or property damage, use extreme care in handling gasoline. Gasoline is extremely flammable and the vapors are explosive.

1. Extinguish all cigarettes, cigars, pipes, and other sources of ignition.

2. Use only an approved gasoline container.

3. Never remove gas cap or add fuel with the engine running. Allow engine to cool before refueling.

4. Never refuel the machine indoors.

5. Never store the machine or fuel container where there is an open flame, spark, or pilot light such as on a water heater or on other appliances.

6. Never fill containers inside a vehicle or on a truck or trailer bed with a plastic liner. Always place containers on the ground away from your vehicle before filling.

7. Remove the mower from the truck or trailer and refuel it on the ground. If this is not possible, then refuel the mower with a portable container, rather than from a gasoline dispenser nozzle.

Continued,

8. Keep the nozzle in contact with the rim of the fuel tank or container opening at all times until fueling is complete. Do not use a nozzle lock-open device.

9. If fuel is spilled on clothing, change clothing immediately.

10. Never overfill fuel tank. Replace gas cap and tighten securely.

V. GENERAL SERVICE

1. Never operate the mower in a closed area.

2. Keep all nuts and bolts tight to be sure the mower is in safe working condition.

3. Never tamper with safety devices. Check their proper operation before each use of the mower.

4. Keep the mower free of grass, leaves, or other debris build-up. Clean up oil or fuel spillage and remove any fuel-soaked debris. Allow machine to cool before storing.

5. If you strike a foreign object, stop and inspect the mower. Repair, if necessary, before starting.

6. Never make any adjustments or repairs with the engine running. Disconnect the spark plug wire and ground against engine to prevent unintended starting.

7. Never attempt to make wheel height adjustments while the engine is running.

8. Check grass catcher components and the rear discharge door frequently and replace only with Bad Boy original parts when necessary.

9. Mower blades are sharp. Wrap the blade or wear gloves, and use extra caution when servicing them.

10 Do not change engine governor setting or over speed the engine.

11. Maintain or replace all safety and instruction labels.

⚠ CAUTION

Muffler and other engine parts become extremely hot during operation and remain hot after engine has stopped. To avoid severe burns on contact, stay away from these areas.

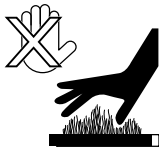

DECALS AND LOCATIONS

All safety decals on the machine must remain in place, intact, and visible. Make sure to have a good understanding of the decals prior to operating the machine. Become familiar with all decal locations and their purpose.

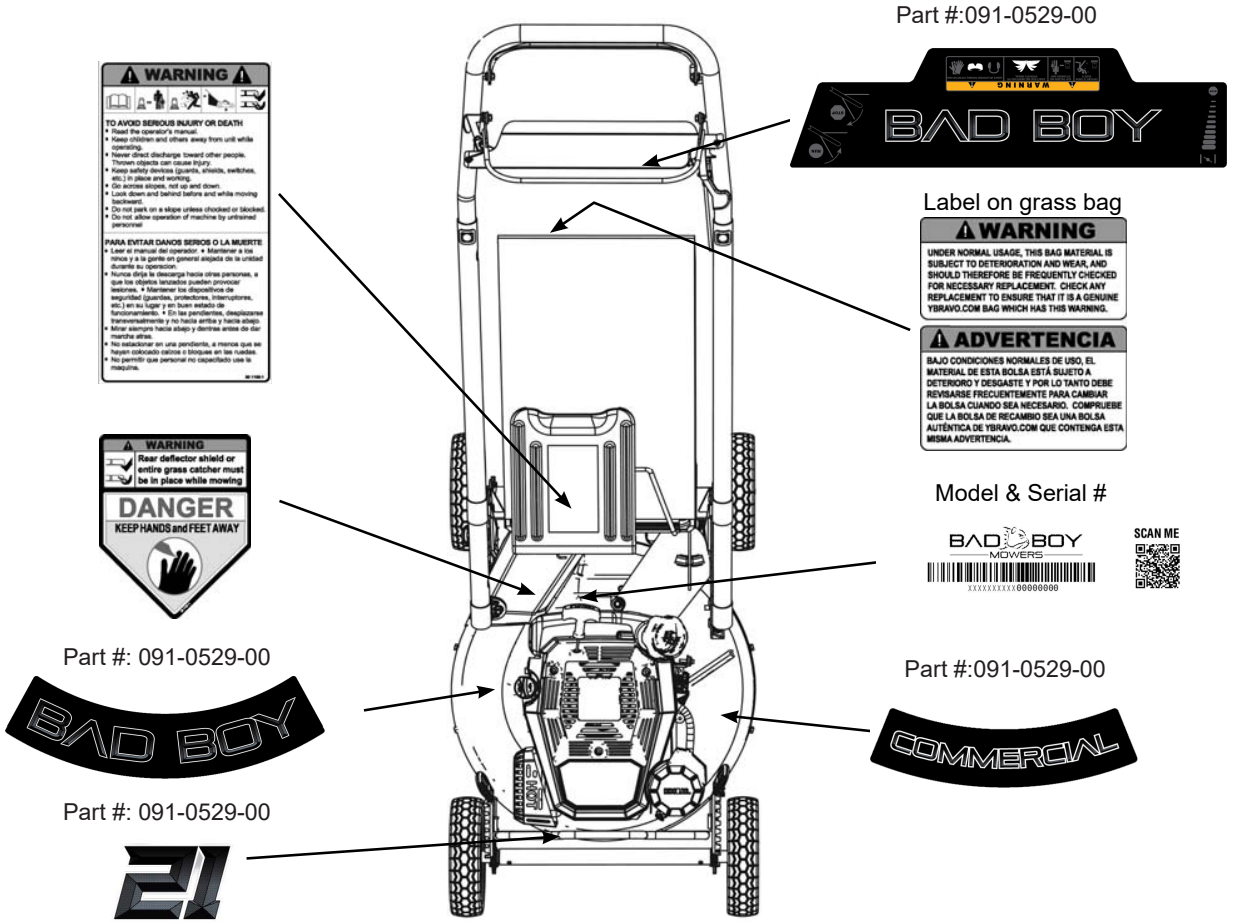

WHAT IS WHAT

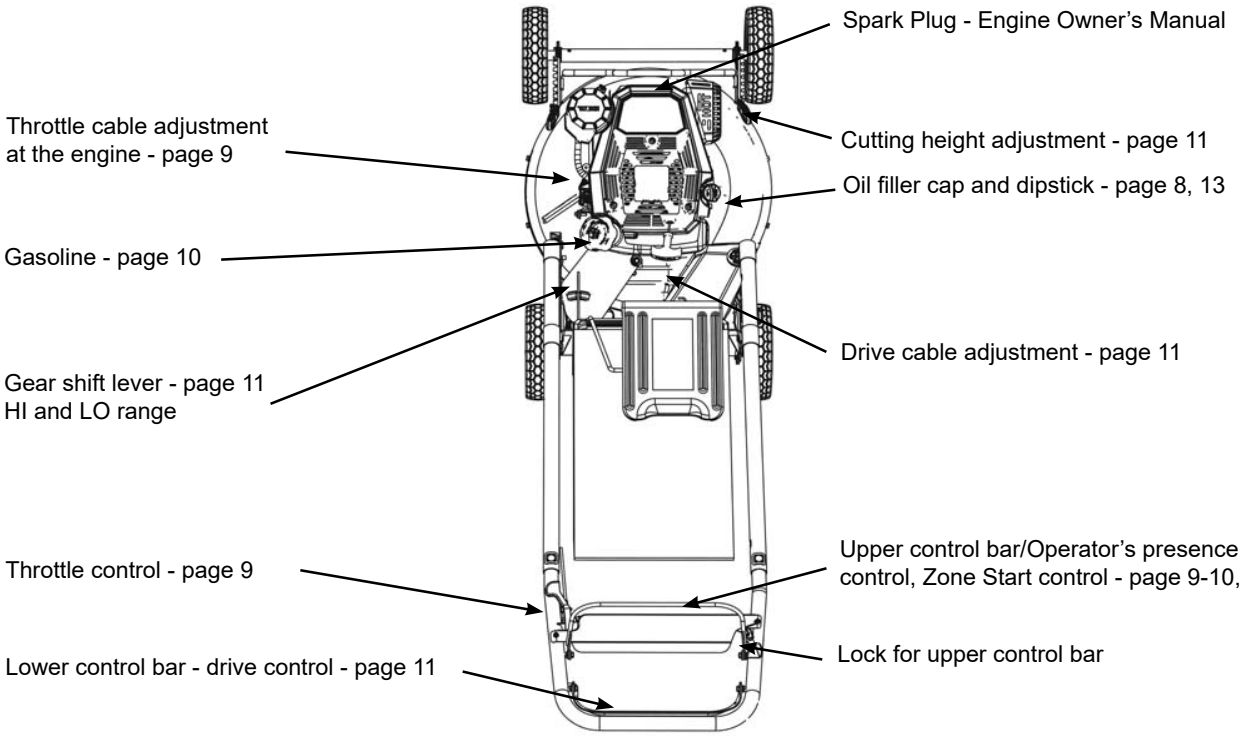

ASSEMBLY - SETUP

UNPACKING:

Carefully remove the mower from its packaging and check that you have all the following items:

Upper Handle complete
(2) Lower Handle tubes
Grass Catcher and Mulch Plug (installed on the mower)
Tool kit
Engine Owner's Manual and Warranty Statement
Bad Boy 21" Push Mower Operator's Manual

NOTICE:

If you are missing any of these items or if you are unsure of how to properly assemble this mower please contact your authorized Bad Boy dealer.

Tools needed for assembly:
2 pcs 10mm wrenches
1 pcs 13mm wrench
1 pcs Needle nose pliers

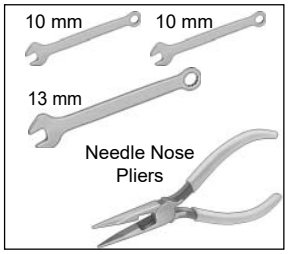

STEP 1

Install the black handle tubes to the mower with the M8 carriage bolts. Do not tighten the nuts. Please note that there are three holes for the upper clamp. We suggest to install the bolt in the center hole as a start.

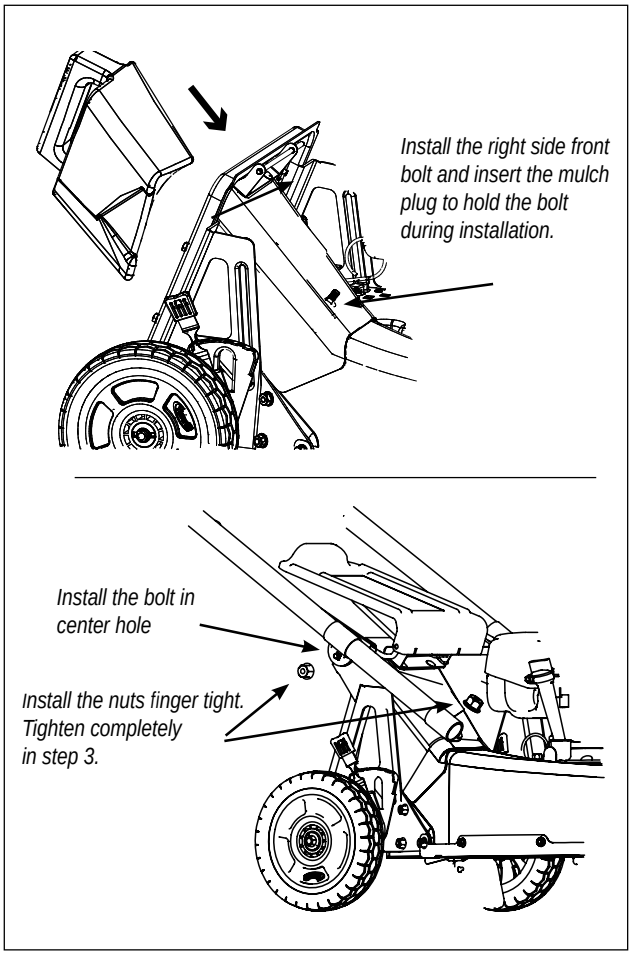

STEP 2

Slide the upper handle assembly into the two lower tubes. Insert the carriage bolt on the left side and use one square washer on each side of the handle tube (1).

Insert the eyelet screw on the right side (2). Use the eyelet to hold the starter rope and handle for convenient reach on the Zone Start model. Leave nuts finger tight..

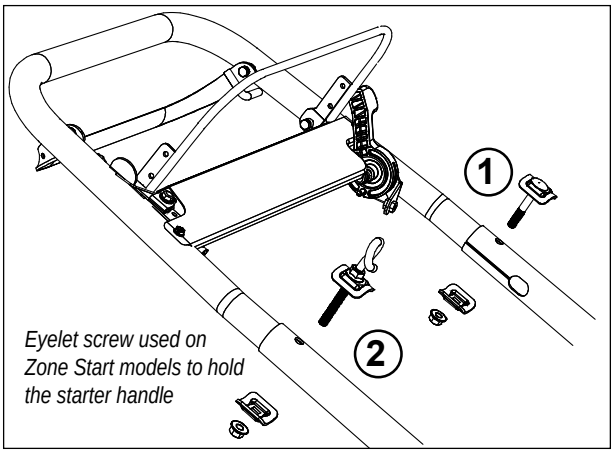

STEP 3

To simplify the alignment of the handle, install the grass catcher.
Tighten the bolts in the following order:
1 - Tighten the two bolts on the right side tube clamps.
2 - Align the left tube with the catcher (same as the right side) and tighten the two clamps.
3 - Tighten the upper bolts that attaches the handle assembly to the tubes.

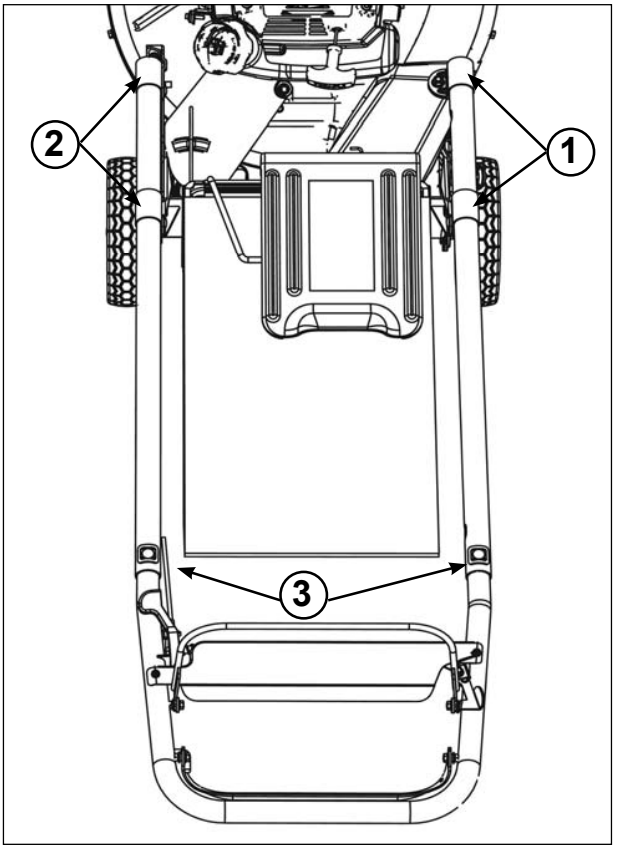

STEP 4
Install the throttle cable into the throttle control. The cable has been adjusted at the factory (1) and the nut locked in place. However verify the proper throttle cable adjustment per the instructions for the Rehlko engine - See “STEP 9”. Install the cable in the holders along the tube as illustrated (2)

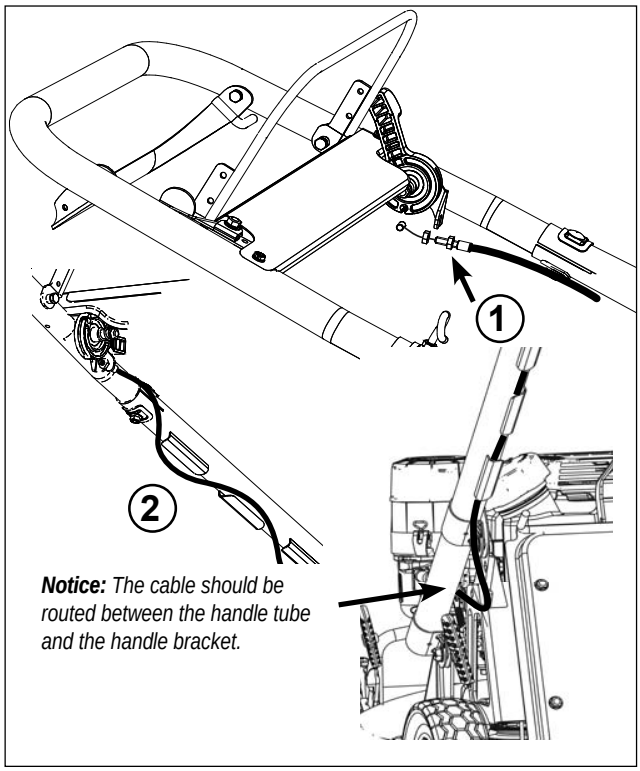

STEP 5
Install the engine control cable in the upper control bar (1).
Note that there are two holes for the control cable.
The 21” Zone Start mowers with the CV200 uses the lower hole at (1). Pull on the cable sheath and insert into the hole (2) of the handle bracket .

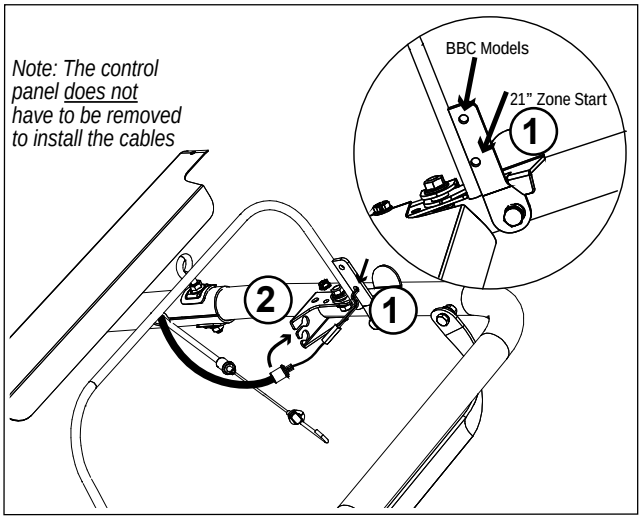

STEP 6
Install the drive cable into the lower control bar (1) and insert the cable sheath fitting into the lower hole of the handle bracket (2). Install the cable in the holders along the tube as illustrated (3)

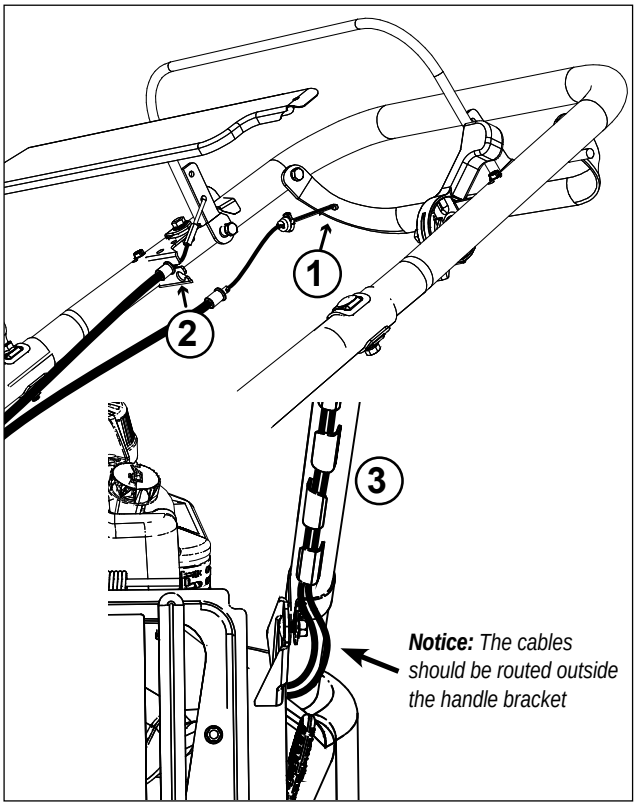

STEP 7
Fill Oil - Rehlko Engine
Fill a new engine with an SAE 10W-30 engine oil.
Fill approximate 24 Fl.Oz (0.7 Qt. - 0.7 Liters)
Please read the Rehlko engine Owner’s Manual for full information. Check the engine oil level daily.

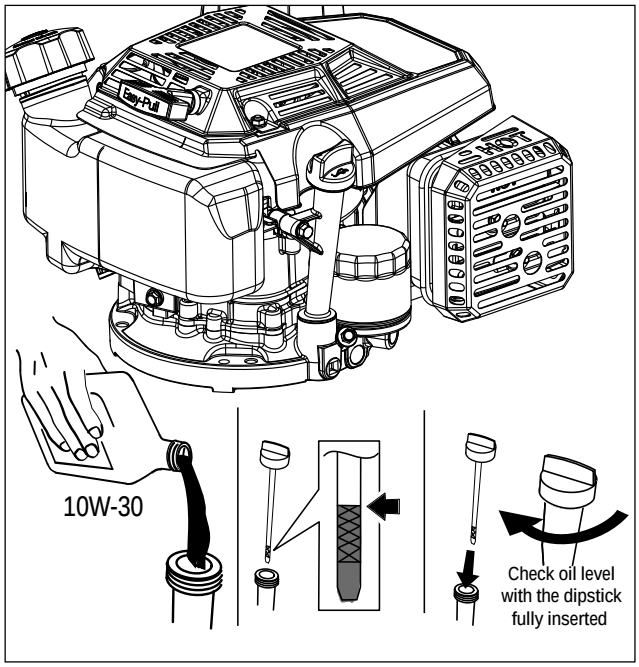

ASSEMBLY - SETUP - ENGINE CONTROLS

Follow these steps to verify proper setup of the mower equipped the Rehlko Zone Start engine.

STEP 8
We recommend verifying that proper cable movement is achieved at the engine when operating the upper control bar.

- Depress the upper control bar (1)
- When the upper control bar is depressed it will release the flywheel brake/stop switch at the engine.
- The cable length is verified at the factory however it is important to understand the function and how to check the adjustment.

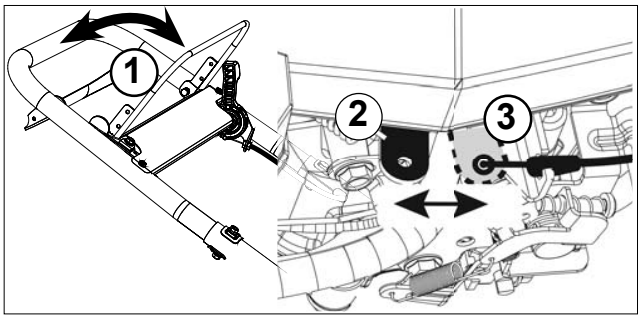

With the control bar in the released position (1) the arm on the engine at (2) should be able to move forward towards its limiter. This position of the arm ensures that the flywheel brake and stop switch stops the engine. When depressing the control bar the stroke of the arm (3) should be a minimum of 7/8" (22 mm) to properly release the engine brake and switch.

STEP 9
Verify that the throttle control is adjusted correctly as follows:

- Move the throttle control to the **Choke** position.
- In the Choke position the arm attached to the throttle cable at (1) the distance will meaure no more than 1 inch (25 mm).
- If needed an adjustment can be made at the throttle control.

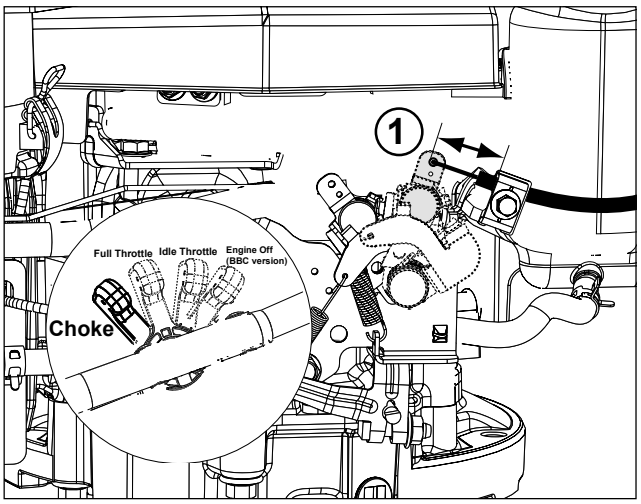

Following these steps for the throttle adjustment will ensure that the Rehlko engine performs properly for this mower.
The engine speed is adjusted to approximately 3300 RPM at the factory.

NOTICE:
The engine speed should preferably be checked and verified with a tachometer. Normal full throttle speed of the engine should be adjusted to 3300 RPM. An authorized Rehlko Engine Dealer can verify and adjust the engine speed properly.

CONTROLS & OPERATION

STEP 10
Before filling the engine with gasoline - follow all instructions in this manual as well as all instructions provided in the Rehlko engine Owner's Manual.

Maximum fill volume:
1.5 Qt (1.4 Liter) - 87 octane or higher

The engine shall not be operated on gasoline marketed as E-15, E-20 or E-85

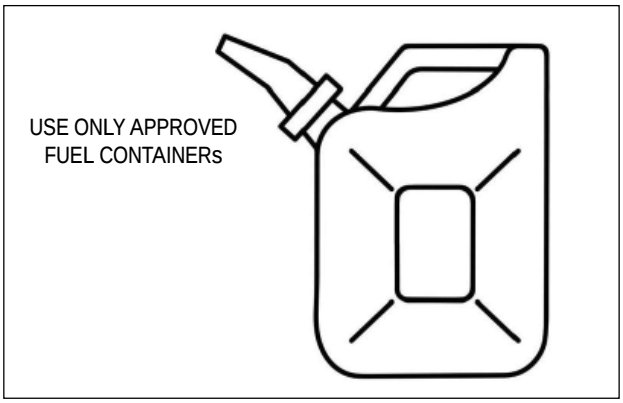

WARNING

Taking the following precautions will lessen the risk of injury and property damage.
Use extreme care in handling gasoline. Gasoline is extremely flammable and the vapors are explosive.

- Extinguish all cigarettes, cigars, pipes, and other sources of ignition.
- Use only approved gasoline containers.
- Never remove gas cap or add fuel with the engine running.
- Allow engine to cool a minimum of 3 minutes before refueling.
- Never fuel the machine indoors.
- Never store the machine or fuel container where there is an open flame, spark, or pilot light such as on a water heater or other appliances.
- Never fill containers inside a vehicle or on a truck or trailer bed with a plastic liner. Always place containers on the ground away from your vehicle when filling.
- Remove the mower from the truck or trailer and refuel it on the ground. If this is not possible, then refuel the equipment with a portable container, rather than from a gasoline dispenser nozzle.
- Keep the nozzle in contact with the rim of the fuel tank or container opening at all times until fueling is complete. Do not use a nozzle lock-open device.
- If fuel is spilled on clothing, change clothing immediately.
- Never overfill fuel tank. Always wipe off any spilled fuel or oil. Replace fuel cap and tighten.

Before operating the mower for the first time, please review and understand the entire manual including all Warnings and Cautions.
Even if you have operated other mowers in the past please take time to become familiar with how this mower works and practice all operations to build up your skills.

BEFORE ANY OPERATION ALWAYS:
- Inspect the mower for any visible damage or broken parts
- Check the oil level in the engine on a daily basis
- Make sure that when you release the Upper Control Bar the engine should stop within three seconds. If the engine does not stop, contact your authorized Bad Boy dealer.
- Never operate the mower with obvious damage or malfunction until the problems have been corrected.

WARNING

Never make adjustments or repairs with the engine running. Disconnect the spark plug wire, and keep the wire away from the plug to prevent accidental starting..

STATING THE ENGINE
1. To start a cold engine it is important to use the "Choke" position. To start a warm engine it is not necessary to use the choke.

2. Press down on the upper control bar to release the engine brake and kill switch. If the upper control bar is released during normal operation the engine should stop completely within three seconds.

For best performance use the "Full Throttle" position for all mowing. To verify that the engine is running at full throttle please follow the steps outlined under the setup instructions on pages 7 through 9. A Bad Boy dealer can also verify the correct full throttle adjustment. The engine speed should be adjusted to approximately 3300 RPM.

Notice: *The upper control bar is an "Operators Presence Control" on the Zone Start mowers. It has to be pushed down before starting the engine.*

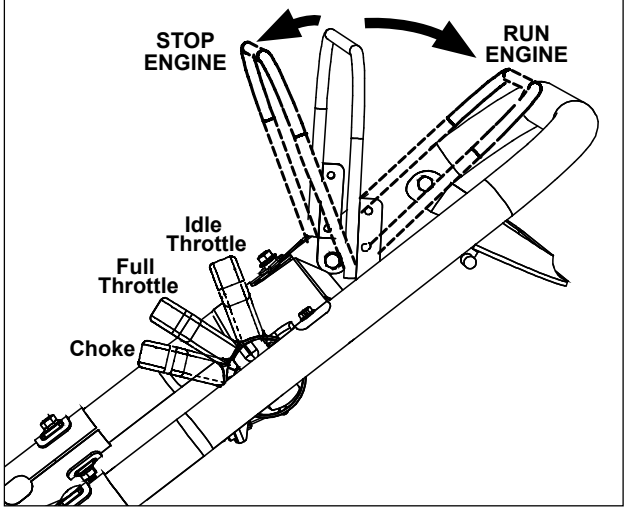

CONTROLS & OPERATION

DRIVE CONTROL

The drive system consists of a two speed transmission and an adjustable belt drive from the engine to the transmission.

The transmission speed can be set to **LO - N - HI**.
HI speed is approximately 4mph - a fast walking speed.
LO speed is approximately 3mph - an average walking speed.

The shifter arm is intentionally made flexible. When the arm is locked in the **LO** or the **HI** position the transmission will automatically mesh into the gears as soon as the drive is engaged by operating the lower control bar.

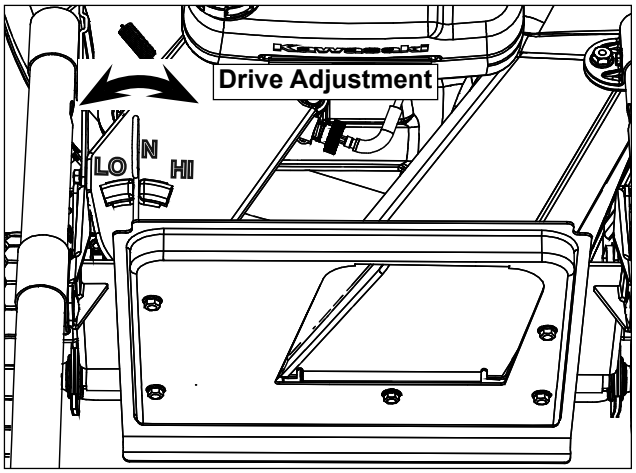

ENGAGING THE DRIVE

To engage and disengage the drive system pull up on the lower control bar (1). Typically the drive will engage when the lower control bar is approximately 1 to 1.5 inches from the handle (2).

Notice

Due to wear, the drive engagement position of the lower control bar can change. If the distance between the lower bar and the handle (2) is less than a 1/4 inch when the mower starts to drive make an adjustment on the red knob located below the engine fuel tank (3).
If needed turn the red knob 2 turns clockwise. Verify the drive position of the control bar by operating the mower. If needed repeat the adjustment.

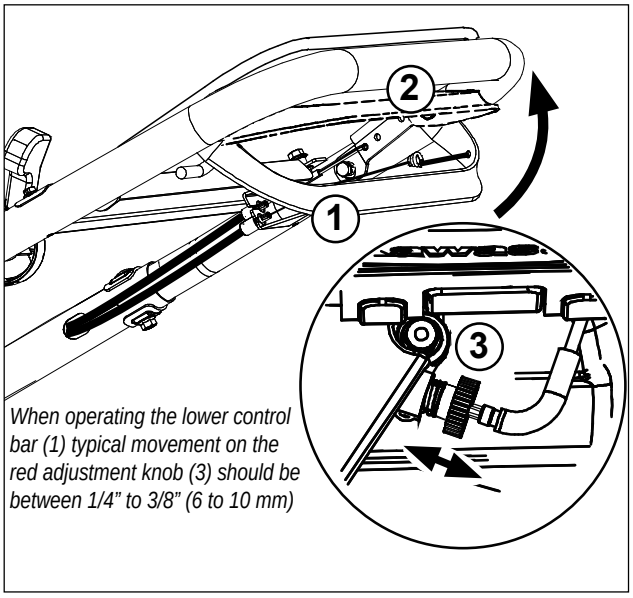

When operating the lower control bar (1) typical movement on the red adjustment knob (3) should be between 1/4" to 3/8" (6 to 10 mm)

HEIGHT ADJUSTMENT

Each wheel can be adjusted individually to a specific cutting height from 1 inch to 4.5 inch. **Notice: It is only possible to move the adjustment on one side 2 - 3 steps each time.**

Moving the front wheel height adjusters forward raises the cutting height. Moving the rear wheel height adjusters towards the rear of the mower raises the rear cutting height.

Always adjust the height adjusters to the same position both in the front and the rear for best cutting results.

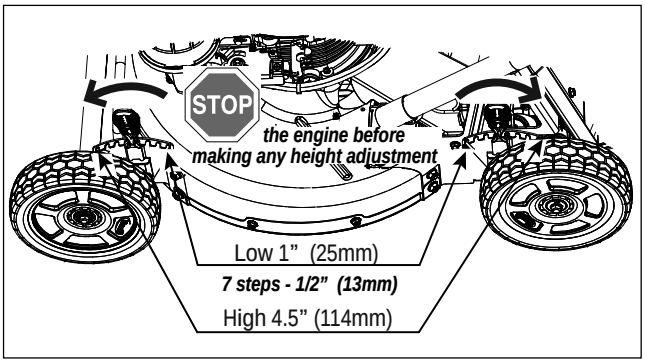

WARNING

Never readjust the cutting height while the engine is running. STOP the engine. Never lift the mower by placing your hand or fingers under the edge of the mower deck.

MODES OF OPERATION

This mower is approved to be used in two different operational modes:

1 With a grass catcher in place

The grass catcher supplied with this mower has been tested for compatibility. It is important to always inspect the catcher for deterioration. If the material is ripped or worn the bag shall not be used.

2. With the mulch plug installed

If the mulch plug is installed ensure that the rear door can close completely.

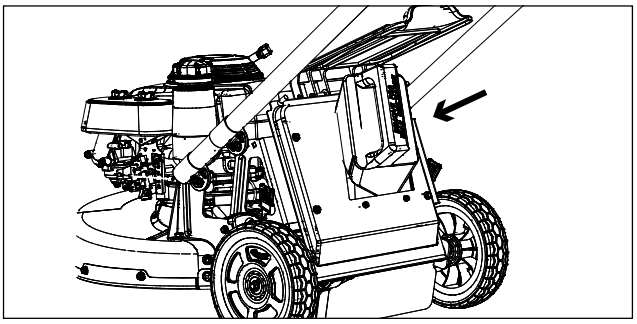

WARNING

Do not operate the lawn mower without the mulch plug or the grass catcher in place. Never attempt to operate the mower with the rear door removed, damaged or propped open.

MAINTENANCE

Maintenance - Service Interval	Procedures
Before each use	Check the engine oil level. Check the operation and function of the Operators Presence Control bar. Inspect the mower blade for wear or damage. Inspect the cables for any wear or damage. Inspect the grass catcher for any damage. Check for any loose or missing screws or damaged parts. Clean under the lawn mower deck (after usage).
First 20 Hours or Within 4 weeks	Change the engine oil. Check the throttle cable adjustment - see Page 9.
Every 50 Hours or every 2 months	Lubricate the pivot arms on the control panel with oil. Check and Clean the engine air filter (see the engine Owner's Manual)
Every 100 Hours or every 4 months	Change the engine oil (more often in dusty conditions). Check the spark plug. Clean the engine with compressed air.
Every 200 Hours or every 8 months	Replace the paper air filter (more frequently in dusty conditions). Replace the spark plug. Adjust the valve clearance.

In addition to this schedule follow the Maintenance Schedule in the Honda or Kawasaki Owner's Manual. This maintenance schedule assumes daily use by a landscape company.
One Month of use is assumed to be 15 to 20 days of operation.

NOTICE

Several of the operations described in this Maintenance section involves placing the mower on its right side.
To avoid spills of oil and gasoline always:
- **Place the mower on a hard surface such as a concrete driveway or a garage floor.**
- **Never place the mower on its side when there is gasoline in the tank - do the service of the mower when you have run out of gasoline during normal operation.**
- **Always make sure that the Oil Filler Cap is tightened.**

Any spillage of oil or gasoline can be extremely flammable and explosive and under certain conditions can cause serious personal injury and property damage.

CLEANING THE MOWER

We do not recommend using a garden hose to clean the mower. The buildup of moist grass, fertilizer and water can cause extreme corrosion damage to many parts of the mower and the engine.

Never use a Pressure Washer:
The use of a pressure washer can force water and moisture into ball bearings and engine parts and cause substantial damage.

- Clean the underside of the mower by scraping any build-up of grass and trash.
- Clean off the outside of the engine and the top of the mower with compressed air. Any accumulation of debris under the belt cover can typically also be removed with compressed air without removing the protective belt cover.

- Wash the Grass Bag with a garden hose frequently. The holes that allows the grass bag to breathe will eventually clog with dirt. A clogged bag will not collect the grass clippings effectively. Do not install and use a wet grass catcher. It will plug prematurely.

MAINTENANCE

BLADE MAINTENANCE

For best results, the mower blade must be kept sharp. Always replace a bent or damaged blade.

Removing the blade

1. Disconnect spark plug wire from spark plug and place wire where it cannot come in contact with plug.
2. Turn lawn mower on its right side. (Make sure air filter and carburetor are up).
3. Use a wood block between blade and mower deck to prevent blade from turning when removing blade bolts.
NOTE: Protect your hands with gloves and/or wrap the blade with a heavy cloth.
4. Remove blade bolts by turning counter-clockwise with a 11/16” (17mm) wrench or socket.

Installing the blade

1. Position the blade with the bent corner of the blade (sail) pointing towards the deck. Install the blade bolts. **Important:** Blade bolts are heat treated. If the bolts are worn or damaged use only bolts available from Bad Boy.
2. Use a block of wood between blade and mower deck and tighten the blade bolts. Always use a torque wrench.
The recommended tightening torque is 30 to 35 ft. lbs. (40 to 45 Nm)

WARNING

Use only a replacement blade approved by Bad Boy Using a blade not approved by Bad Boy is hazardous. It can damage your mower and cause serious personal injury.

A worn or damaged blade can break and parts of the blade could be thrown into the operators or bystanders area, resulting in serious personal injury or death.

Inspecting the blade

Carefully examine the blade for straightness, damage and abnormal wear. In some areas abrasive sand and dust can wear away the metal of the blade - see illustration.

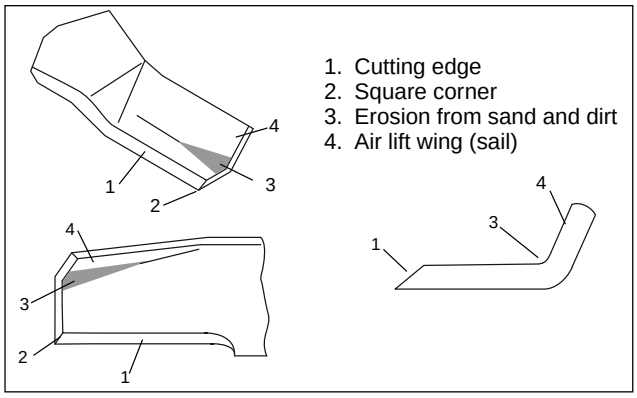

Sharpening the blade

File the top side of the blade (1) and maintain the original angle of the cutting edge. Maintain the radius where the cutting edge ends. Always remove the same amount of material from both ends of the blade. This ensures that the blade stays balanced.

If sharpening is done with a grinding stone the blade should always be balanced using a blade balancing device. A blade balance tool is available from Bad Boy or most lawn and garden dealers, and hardware stores.

If the blade shows wear or cracking at the edge where the blade is bent up (3) it must immediately be replaced.

ENGINE OIL CHANGE

NOTICE: Before tipping lawn mower on its right side to drain oil, empty fuel tank by running engine until fuel tank is empty.

1. Disconnect spark plug wire from spark plug and place wire where it cannot come in contact with plug.

2. Remove oil filler cap/dipstick.

3. Tip lawn mower on its right side as shown and drain oil into a suitable container. Rock lawn mower back and forth to remove any oil trapped inside of engine.

4. Wipe off any spilled oil from lawn mower or side of engine.

5. Fill engine with oil. Slowly pour oil down the oil fill spout into the engine. Use an SAE 10W-30 oil 24 Fl.Oz - 0.7 Liter

See engine Owner’s Manual for complete information.

6. Wait one minute to allow oil to settle. Use the gauge on oil filler cap/dipstick for checking level. Insert the dipstick into the tube and tighten it for a proper reading before adding more oil.

7. Continue adding small amounts of oil and rechecking the dipstick until it reads full. DO NOT overfill, or engine will smoke on startup.

8. Always be sure to retighten oil fill cap/dipstick before starting engine.

9. Reconnect spark plug wire to spark plug.

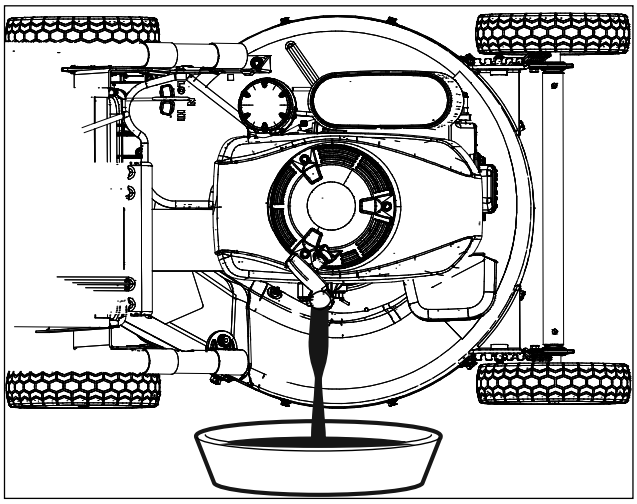

LIMITED WARRANTY

1. **WHAT THIS WARRANTY COVERS, AND FOR HOW LONG:**
   Bad Boy Mowers, LLC will, at its option, repair or replace, without charge, any part covered by the warranty which is found to be defective in material and/or workmanship for **one (1) year** after the date of sale to the original retail purchaser **unless the product is used for rental purposes, in which case this warranty is voided.**
   - Replacement parts are warranted for **sixy (60) days** from the retail purchase date against materials or workmanship defects.

   At Bad Boy Mowers, LLC's request, customer will make the defective part available for inspection by Bad Boy Mowers, LLC and/or return the defective part to Bad Boy Mowers, LLC, **transportation charges prepaid.**
2. **WHAT THIS WARRANTY DOES NOT COVER:**
   A. This warranty does not cover defects caused by depreciation or damage caused by normal wear, accidents, improper maintenance, improper use or abuse of the product, alterations, natural discoloration of material due to ultraviolet light, sand abrasion damage, or failure to follow the instruction contained in the Owner's Manual for operation and maintenance.
   B. The customer shall pay any charges for making service calls and/or for transporting the mower to and from the place where the inspection and/or warranty work is performed. **Bad Boy Mowers, LLC will not be responsible for the pickup and delivery of a machine for warranty purposes.**
   C. Engines are warranted separately by their respective manufacturer. The available warranties covering this item are furnished with each mower. Bad Boy Mowers, LLC does not assume any warranty obligation, liability or modification for this item, which is covered exclusively by the stated warranty of the respective manufacturers.
   D. Tires, blades, belts, and dust covers are considered to be consumable wear items and are therefore not warranted.
   E. Normal maintenance services such as oil change, cleaning, lubrication, and adjustments.
   F. Replacement of services and items, such as oil, lubricants, spark plugs, belts, rubber hoses or other items subject to normal service replacement.
3. **HOW TO OBTAIN SERVICE UNDER THIS WARRANTY:**
   A. Warranty service can be arranged by contacting the authorized Bad Boy dealer where you purchased your mower or your nearest authorized Bad Boy dealer. Proof of purchase may be required to verify warranty coverage. Warranty repairs must be completed by an authorized Bad Boy dealer.
   B. **Warranty claims will not be reviewed or paid unless the warranty registration is received by Bad Boy Mowers, LLC within 30 days of the retail purchase date.**
   C. Warranty claims requiring parts returned will be settled upon return of parts to Bad Boy for inspection.
   D. All warranty issues must be handled through an authorized service center or dealership.
4. WARRANTY LIMITATION:
   A. **THERE IS NO OTHER EXPRESS WARRANTY. ANY WARRANTY THAT MAY BE IMPLIED FROM THIS PURCHASE INCLUDING MERCHANTABILITY AND FITNESS FOR A PARTICULAR PURPOSE IS HEREBY LIMITED TO THE DURATION OF THIS WARRANTY AND TO THE EXTENT PERMITTED BY LAW ANY AND ALL IMPLIED WARRANTIES ARE EXCLUDED.** Some states do not allow limitations on how long an implied warranty lasts, so the above limitations may not apply to you.
   B. **BAD BOY MOWERS, LLC WILL NOT BE LIABLE FOR ANY INCIDENTAL, CONSEQUENTIAL, OR SPECIAL DAMAGES AND/OR EXPENSES IN CONNECTION WITH THE PURCHASE OR USE OF THE MOWER**. Some states do not allow the exclusion or limitation of incidental or consequential damages, so the above limitation(s) or exclusion(s) may not apply to you.
   C. Only the warranty expressed in this limited warranty shall apply and no dealer, distributor, or individual is authorized to amend, modify, or extend this warranty in any way. Accordingly, additional statements such as dealer advertising or presentations, whether oral or written, do not constitute warranties by Bad Boy Mowers, LLC, and should not be relied on.
   D. This warranty extends only to turf equipment operated under normal conditions and properly serviced and maintained. The warranty expressly does not cover (i) any defects, damage or deterioration due to normal use, wear and tear, or exposure; (ii) normal maintenance services such as oil change, cleaning, lubrication, adjustment; (iii) replacement of services, items, such as oil, lubricants, spark plugs, belts, rubber hoses or other items subject to normal service replacement; (iv) damage or defects arising out of or relating to misuse, neglect, alteration, negligence or accident; (v) repair or replacement arising from operation of or use of the turf equipment which is not in accordance with operating instructions as specified in the operator's manual or other operational instructions provided by Bad Boy Mowers, LLC; (vi) repair or replacement arising as a result of any operation from

turf equipment that has been altered or modified so as to, indetermination of Bad Boy Mowers, LLC, adversely affect the operation, performance or durability of the equipment or that has altered, modified or affected the turf equipment so as to change the intended use of the product; (vii) repair or replacement necessitated by use of parts, accessories or supplies, including gasoline, oil or lubricants, incompatible with the turf equipment or other than as recommended in the operator's manual or other operational instructions provided by Bad Boy Mowers, LLC; (viii) repairs or replacements resulting from parts or accessories which have adversely affected the operation, performance or durability of the turf equipment; or (ix) damage or defects due to or arising out of repair of turf equipment by person or persons other than an authorized Bad Boy Mowers, LLC, service dealer or the installation of parts other than genuine Bad Boy Mowers, LLC, recommended parts. **As a condition to this warranty, customer shall have read the operator's manual and ensured the mower has been registered within 30 days of purchase.**

E. This warranty gives you specific legal rights, and you may also have other rights, which vary from state to state.

BAD BOY
MOWERS

www.badboycountry.com
Bad Boy, Inc.
102 Industrial Drive
Batesville, Arkansas 72501